"APPROVED FOR RELEASE: 08/25/2000 CIA-RDP86-00513R000411620010-6

DUVANKOV, G., inzh.

Shortcomings of useful collections. Okhr. truda i sots. strakh. 3 no.9:76-77 S '60. (MIRA 14:4)
(Bibliography—Industrial hygiene)

APPROVED FOR RELEASE: 08/25/2000 CIA-RDP86-00513R000411620010-6"

"APPROVED FOR RELEASE: 08/25/2000 CIA-RDP86-00513R000411620010-6

BOL'SHOV, M.; GOSTEV, V.; DUVANKOV, G., inzh.; AGAFONOV, I.

Old sicknesses of the new machinery. Okhr. truda i sots. strakh. 4 no.3:42-46 Mr '61. (MIRA 14:3)

1. Tekhnicheskiy inspektor TSentral'nogo komiteta profsoyuza rabochikh i sluzhashchikh sel'skogo khozyaystva i i zagotovok (for Bol'shov). 2. Starshiy tekhnicheskiy inspektor Moskovskogo soveta profsoyuzov(for Gostev). Predsedatel' obshchestvennogo soveta profsoyuzov "Okhrany truda i sotsial'noye strakhovaniya" (for Duvankov). 4. Spetsial'nyy korrespondent zhurnala "Okhrana truda i sotsial'noye strakhovaniye" (for Agafonov).

(Machinery—Design)
(Industrial safety)

APPROVED FOR RELEASE: 08/25/2000 CIA-RDP86-00513R000411620010-6"

"APPROVED FOR RELEASE: 08/25/2000 CIA-RDP86-00513R000411620010-6

DUVANKOV, G.

Attention, radioactivity! Okhr.truda i sots.strakh. 6 no.1:39-40 Ja '63. (MIRA 16:1)

(Radioactivity—Safety measures)

APPROVED FOR RELEASE: 08/25/2000 CIA-RDP86-00513R000411620010-6"

"APPROVED FOR RELEASE: 08/25/2000 CIA-RDP86-00513R000411620010-6

DUVANKOV, N.V.

1933 DUVANKOV, N. V.

Pomoshch' profgpupporgu, (Obmen Opytom) (Rasskaz profgrupporga mekhan. Uchastka tsekha zapasnykh chastey zavoda S. Kh. Mashinostroyenip im. Frunze) Frunze, 1954. 12s 19sm. (Kirgiz. resp. sovet profsoyuzob i zavkom profsoyuza rabochixh machinostroyeniya.) 2,000 ekz. B. Ts. (54T56497) P 331,881,0:621,80 (584,21)

APPROVED FOR RELEASE: 08/25/2000 CIA-RDP86-00513R000411620010-6"

"APPROVED FOR RELEASE: 08/25/2000 CIA-RDP86-00513R000411620010-6

GALYATIN, V.M.; KALINSKIY, D.N.; Prinimali uchastiye: KUROCHKIN, I.F.; DUVANOV, A.I.; SOLOV'YEV, Yu.F.; GERASIMOV, Yu.V.; GROSVAL'D, V.G.; SHASHKOV, V.N.; VOLKOV, A.A.; ZHILKO, E.I.; MITROPOL'SKIY, Yu.I.; FEDOSEYEV, S.V.; GONCHAROV, F.I., rabotnik; SHEMETOV, P.Ye., rabotnik; CHUPRINA, I.A., rabotnik; DEMIN, P.Ye., rabotnik; GONCHARENKO, P.V., rabotnik; SIMANYUK, G.N., rabotnik

Investigating power and technological parameters of rolling on the 2350 medium sheet mill. [Sbor. trud.] TSNIICHM no.29:138-148 '63. (MIRA 17:4)

1. Sotrudniki TSentral'nogo nauchno-issledovatel'skogo instituta chernoy metallurgii (for Gerasimov, Grosval'd, Shashkov, Volkov, Zhilko, Mitropol'skiy, Fedoseyev). 2. Listoprokatnyy tsekh Magnitogorskogo metallurgicheskogo kombinata (for Goncharov, Shemetov, Demin, Chuprina, Goncharenko, Simanyuk).

APPROVED FOR RELEASE: 08/25/2000 CIA-RDP86-00513R000411620010-6"

"APPROVED FOR RELEASE: 08/25/2000 CIA-RDP86-00513R000411620010-6

ACC NR: AP7002983 (A) SOURCE CODE: UR/0413/66/000/024/0081/0081

INVENTOR: Kroshchenko, V. D.; Duvanov, A. M.; Kuleshov, Yu. N.

ORG: None

TITLE: An installation for studying the ballistics of artillery systems. Class 42, 189608 [announced by the Ramenskoye Department of the All-Union Scientific Research Institute of Geophysical Exploration Methods (Ramenskoye otdeleniye Vsesoyuznogo nauchno-issledovatel'skogo instituta geofizicheskikh metodov razvedki)]

SOURCE: Izobreteniya, promyshlennyye obraztsy, tovarnyye znaki, no. 24, 1966, 81

TOPIC TAGS: ballistics, artillery weapon, ballistic test facility

ABSTRACT: This Author's Certificate introduces an installation for studying the ballistics of artillery systems. The unit is mounted on a stationary framework and contains a hermetically sealed housing with optical inputs. A piston in this housing separates the optically transparent fluid which fills the test chamber of the installation from the working fluid fed from a hydraulic compressor. To eliminate the effect of temperature on the housing and optical inputs, a chamber is built into the housing to hold the experimental capsule with fuse, powder charge and firing pin. A heating element is used for localized heating of the experimental capsule alone.

 UDC: 620.17:623.522

APPROVED FOR RELEASE: 08/25/2000 CIA-RDP86-00513R000411620010-6"

"APPROVED FOR RELEASE: 08/25/2000 CIA-RDP86-00513R000411620010-6

ACC NR: AP7002983

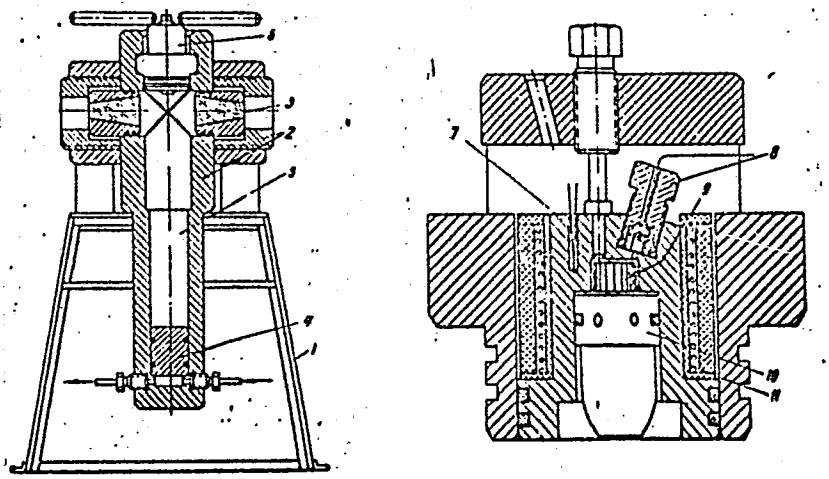

1--stationary frame; 2--housing; 3--optical inputs; 4--piston; 5--test chamber; 6--chamber; 7--experimental capsule; 8--fuse; 9--powder charge; 10--firing pin; 11--heating element

SUB CODE: 19/ SUBM DATE: 18Dec64

Card 2/2

APPROVED FOR RELEASE: 08/25/2000 CIA-RDP86-00513R000411620010-6"

"APPROVED FOR RELEASE: 08/25/2000 CIA-RDP86-00513R000411620010-6

DUVANOV, L.; STEPANOVA, O.; KLECHANSKIY, V., kochegar; GOSTEVA, P., gornichnaya

Workers of a progressive hotel speak. Zhil-kom. khoz. 8 no.5:23-24 '58. (MIRA 11:6)

1.Direktor gostinitsy "Voronezh" RSFSR (for Duvanov). 2.Administrator gostinitsy "Voronezh", RSFSR (for Stepanova).
(Hotels, taverns, etc.)

APPROVED FOR RELEASE: 08/25/2000 CIA-RDP86-00513R000411620010-6"

"APPROVED FOR RELEASE: 08/25/2000 CIA-RDP86-00513R000411620010-6

DUVANOV, PAVEL ANTONOVICH

Duvanov, Pavel Antonovich. Skorostno izpichane na tukhlite. (Prevede ot ruski St. Vasileva. Sofiya) Profizdat (1951) 71 p. (Fast burning of bricks. Tr. from the Russian)

SO: MONTHLY LIST OF EAST EUROPEAN ACCESSIONS, L C., VOL. 3, NO. 1, Jan. 1954, Uncl.

APPROVED FOR RELEASE: 08/25/2000 CIA-RDP86-00513R000411620010-6"

"APPROVED FOR RELEASE: 08/25/2000 CIA-RDP86-00513R000411620010-6

DUVANOV, Pavel Antonovich; SOKOLOV, Yu.B., inzhener, redaktor; SHNEYDER, Ye.B., redaktor; LYUDKOVSKAYA, N.I., tekhnicheskiy redaktor

[For high brick production from ring kilns] Za vysokie s"emy kirpicha s kol'tsevykh pechei. Pod red. IU.B.Sokolova. Moskva, Gos. izd-vo lit-ry po stroitel'nym materialam, 1954. 62 p. (MLRA 8:7)
(Brickmaking) (Kilns)

APPROVED FOR RELEASE: 08/25/2000 CIA-RDP86-00513R000411620010-6"

"APPROVED FOR RELEASE: 08/25/2000 CIA-RDP86-00513R000411620010-6

DUVANOV, Pavel Antonovich, master Voronezhskogo kirpichnogo zavoda no.8, laureat Stalinskoy premii; SHLEPINA, M.M., redaktor; RIKOV, S.I., tekhnicheskiy redaktor.

[Rapid kiln firing of bricks] Skorostnoi obzhig kirpicha. 2-e, perer. i dop. izd. [Moskva] Izd-vo VTsSPS Profizdat, 1954. 87 p.[Microfilm] (Brickmaking) (MLRA 7:12)

APPROVED FOR RELEASE: 08/25/2000 CIA-RDP86-00513R000411620010-6"

"APPROVED FOR RELEASE: 08/25/2000 CIA-RDP86-00513R000411620010-6

DUVANOV, P.

Let us produce lime in brickkilns. p. 2

CONSTRUCTORUL, Bucuresti, Vol 8, No. 320, May, 1956

SO: East European Accessions List (EEAL) Library of Congress, Vol 5, No. 7, July, 1956

APPROVED FOR RELEASE: 08/25/2000 CIA-RDP86-00513R000411620010-6"

"APPROVED FOR RELEASE: 08/25/2000 CIA-RDP86-00513R000411620010-6

DUVANOV, P., laureat Stalinskoy premii.

Advanced practices should available to our foreign friends. (MIRA 10:10)
Stroi.mat. 3 no.10:22-24 O '57.

1.Deputat Verkhovnogo Soveta RSFSR.
(Brickmaking)

APPROVED FOR RELEASE: 08/25/2000 CIA-RDP86-00513R000411620010-6"

"APPROVED FOR RELEASE: 08/25/2000 CIA-RDP86-00513R000411620010-6

DUVANOV, P.A., laureat Stalinskoy premii

Operation of large rotary kilns with three firing zones [Suggestion by P.A. Duvanov]. Rats. i izobr. predl. v stroi. no.6:102-104 '58. (MIRA 11:10)

(Kilns, Rotary)

APPROVED FOR RELEASE: 08/25/2000 CIA-RDP86-00513R000411620010-6"

"APPROVED FOR RELEASE: 08/25/2000 CIA-RDP86-00513R000411620010-6

ACC NR: AR6035375 SOURCE CODE: UR/0271/66/000/009/B046/B047

AUTHOR: Duvanov, S. G.; Lipatov, L. N.

TITLE: Contribution to the calculation of the errors of analog-digital converters

SOURCE: Ref. zh. Avtomatika, telemekhanika i vychislitel'naya tekhnika, Abs. 9B361

REF. SOURCE: Sb. Avtomatiz. khim. i neftekhim. proiz-v. Vyp. 3. M., 1965, 19-31

TOPIC TAGS: analog digital converter, ~~computer component, computer design~~, random process

ABSTRACT: The authors investigate the level-quantization process that is realized in analog-digital converters. Formulas are derived for estimating the quantization errors for the case when the transformed system is a continuous random process. 5 illustrations. Bibliography, 7 titles. G. K.

SUB CODE: 09

Card 1/1 UDC: 681.142.621

APPROVED FOR RELEASE: 08/25/2000 CIA-RDP86-00513R000411620010-6"

"APPROVED FOR RELEASE: 08/25/2000 CIA-RDP86-00513R000411620010-6

DUVANOV, S.G., inzh.

Memory device for levels of short-time positive-polarity pulses with a high duty factor. Priborostroenie no.3:26-27 Mr '65. (MIRA 18:4)

APPROVED FOR RELEASE: 08/25/2000 CIA-RDP86-00513R000411620010-6"

"APPROVED FOR RELEASE: 08/25/2000 CIA-RDP86-00513R000411620010-6

PEPTYUK, V.G., provizor; DUVANOVA, V.D., vrach

Rostov drug stores operate in a new way. Apt.delo 8 no.3:45-46 My-Je '59. (MIRA 12:8)

1. Iz Rostovskogo-na-Donu otdeleniya Glavnogo aptechnogo upravleniya RSFSR.

(ROSTOV-ON-DON--DRUG STORES)

APPROVED FOR RELEASE: 08/25/2000 CIA-RDP86-00513R000411620010-6"

"APPROVED FOR RELEASE: 08/25/2000 CIA-RDP86-00513R000411620010-6

DUVE, O.G. [Duve, O.H.]

Diagnosing gonorrhea in pregnant women. Ped., akush. i gin. 20 no.1:41-43 '58. (MIRA 13:1)

1. Glavnyy akusher-ginekolog Voroshilovgradskogo oblzdravotdela, Voloshirovgradskaya oblastnaya bol'nitsa (glavnyy vrach - I.D. Vashchenko).
(PREGNANCY, COMPLICATIONS OF) (GONORRHEA)

APPROVED FOR RELEASE: 08/25/2000 CIA-RDP86-00513R000411620010-6"

"APPROVED FOR RELEASE: 08/25/2000 CIA-RDP86-00513R000411620010-6

DUVINA, Ye.F.; GORYAINOVA, Z.I.

Late results of the treatment of female sterility at Lipetsk Health Resort. Sbor. nauch. rab. vrach. san.-kur. uchr. profsoiuzov no.1:186-190 '64. (MIRA 18:10)

1. Kurort Lipetsk (nauchnyy rukovoditel' dotsent F.S.Sirotkina).

APPROVED FOR RELEASE: 08/25/2000 CIA-RDP86-00513R000411620010-6"

"APPROVED FOR RELEASE: 08/25/2000 CIA-RDP86-00513R000411620010-6

DUVINA, YE. K.

TATARSKAYA, G.A.; DUVINA, Ye.K.

Treating dysentery with an alcohol vaccine combined with synthomycin. Sovet.med. 19 no.5:70-73 My '55. (MLRA 8:8)

1. Iz Rostovskogo instituta epidemiologii, mikrobiologii i gigiyeny (dir. Ye.S.Soboleva) i kafedry infektsionnykh bolezney (zav. A.A. Dmitriyev) Rostovskogo meditsinskogo instituta.
(DYSENTERY) (ALCOHOL--THERAPEUTIC USE)
(CHLOROMYCETIN)

APPROVED FOR RELEASE: 08/25/2000 CIA-RDP86-00513R000411620010-6"

"APPROVED FOR RELEASE: 08/25/2000 CIA-RDP86-00513R000411620010-6

APPROVED FOR RELEASE: 08/25/2000 CIA-RDP86-00513R000411620010-6"

"APPROVED FOR RELEASE: 08/25/2000 CIA-RDP86-00513R000411620010-6

LEFTER, Gh.; DUVLEA, I.

Warning and fighting against apple worms (Carpocapsa pomonella) and the common red spider (Tetranychus Urticae Koch). Studii agr Timisoara 10 no.1:151-161 Ja-Je '63.

APPROVED FOR RELEASE: 08/25/2000 CIA-RDP86-00513R000411620010-6"

"APPROVED FOR RELEASE: 08/25/2000 CIA-RDP86-00513R000411620010-6

CVIIC, Vlaho, dr.; VAJCL, Josip E., porucnik fregate; DUVNJAK, Stjepo, kapetan korvete; ZORE, Mira

Oceanographic research in the Adriatic Sea within the framework of the International Geophysical Year. Hidrograf.god 1958 (Published 1959):55-87. (EEAI 9:5)

1. Jugoslovenska ratna mornarica (for Vajcl and Duvnjak).
(Adriatic Sea) (Oceanography)
(International Geophysical Year, 1957-1958)

APPROVED FOR RELEASE: 08/25/2000 CIA-RDP86-00513R000411620010-6"

"APPROVED FOR RELEASE: 08/25/2000 CIA-RDP86-00513R000411620010-6

DUVNJAK, Stjepo, kapetan korvete (Split)

Testing wind waves. Hidrograf.god 1958 (Published 1959):165-168.
(EEAI 9:5)

1. Jugoslovenska ratna mornarica.
(Wind) (Waves)

APPROVED FOR RELEASE: 08/25/2000 CIA-RDP86-00513R000411620010-6"

"APPROVED FOR RELEASE: 08/25/2000 CIA-RDP86-00513R000411620010-6

BALAKINA, L.M.; BULMASOV, A.P.; DUVZHIR, G.; YESKIN, A.S.; KURUSHIN, R.A.; LOGACHEV, N.A.; LUK'YANOV, A.V.; NATSAG-YUM, L.; SOLONENKO, V.P., prof.; TRESKOV, A.A.; FLORENSOV, N.A.; KHIL'KO, S.D.; SHMOTOV, A.P.; ARSEN'YEV, A.A., red.izd-va; DOROKHINA, I.N., tekhn. red.

[Gobi Altai earthquake] Gobi-Altaiskoe zemletriasenie. Moskva, Izd-vo Akad. nauk SSSR, 1963. 390 p. (MIRA 16:5)

1. Akademiya nauk SSSR. Sibirskoye otdeleniye. Vostochno-Sibirskiy geologicheskiy institut. 2. Chlen-korrespondent Akademii nauk SSSR (for Florensov).
(Gobi Altai—Earthquakes)

APPROVED FOR RELEASE: 08/25/2000 CIA-RDP86-00513R000411620010-6"

"APPROVED FOR RELEASE: 08/25/2000 CIA-RDP86-00513R000411620010-6

DUWADZINSKI S., WESOŁOWSKI L.

Zaopatrzenie materiałowe w przemyśle gastronomicznym (Material supply in the gastronomical industry) by S. Duwadzinski, and L. Wesołowski. Reported in New Books (Nowe Ksiazki.) February 15, 1956. No. 4.

APPROVED FOR RELEASE: 08/25/2000 CIA-RDP86-00513R000411620010-6"

"APPROVED FOR RELEASE: 08/25/2000 CIA-RDP86-00513R000411620010-6

KRZYSZKOWSKA, Anna; BIAŁOKOZ, Michal; CYGANCZUK, Janusz; DUWINSKA-SLIWINSKA, Bozena; FIRKO-STEPNIEWSKA, Otylia; GURTAT, Bronislaw; KANDZIORA, Stanislaw; KUBIT, Stanislaw; MOKRZYCKI, Mikolaj; POLKOSZEK, Mieczyslaw; ROMANOWSKA, Izabella; WASOWSKA, Janina; WESTRYCH, Feliks; WISNIEWSKI, Henryk.

Tuberculin reaction in recruits. Gruzlica 32 no.2:131-139 F'64

1. Z Zakladu Epidemiologii Instytutu Gruzlicy; Kierownik: doc. dr. med. O. Buraczewski.

*

APPROVED FOR RELEASE: 08/25/2000 CIA-RDP86-00513R000411620010-6"

"APPROVED FOR RELEASE: 08/25/2000 CIA-RDP86-00513R000411620010-6

DUX, K.; DUX, A.

Biological and histological characteristics of transplantable mouse cancer obtained at the Institute of Oncology, Gliwice Division. Pat. polska 3 no. 3:217-223 July-Sept 1952. (CIML 23:5)

1. Of the Department of the Biopathology of Cancer (Head--Prof. K. Dux, M.D.) of Gliwice Division of the Institute of Oncology. 2. Report given before the Second Congress of Anatomo-Pathologists in Krakow 27-29 Sept, 1951.

APPROVED FOR RELEASE: 08/25/2000 CIA-RDP86-00513R000411620010-6"

"APPROVED FOR RELEASE: 08/25/2000 CIA-RDP86-00513R000411620010-6

4110. DUX A. Zakł. Biol. Nowotworów Inst. Onkol., Gliwice. Badania nad przeszczepialnością raka gruczołu mlecznego myszy *Experimental studies on the transplantability of mammary cancer in mice* Nowotwory 1957, 7/1-2 (67-90) Graphs 2 Tables 8 Illus. 3

A spontaneous adenocarcinoma of the breast of a heterozygotic white mouse was transplanted for the period of 5 yr. (47 serial passages). Simultaneously the inbreeding of 2 mice strains deriving from another female with spontaneous mammary gland cancer was initiated. One of them is a low cancerous strain (BR), the other a non-cancerous strain (BN); 15 inbred generations were obtained up to the end of these experiments. In the 31st passage a sudden increase of the transplantability rate in both sexes was observed. In series from 1st to 30th and from 31st to 47th passages the transplantability rate increased significantly: in males from 43.3% to 87% and in females from 36.6% to 71.7%. No difference in transplantability in adult animals of either sex was noted. The latent period of the new-growth did not change. The survival time of the animals however seems to be shorter in the latest period of experiments. The survival time of the females was longer than that of males, but this difference was statistically not significant. The primary spontaneous tumours were verified as adenocarcinoma. After some passages this tumour showed a solid structure, but up to the last passages the pictures of the primary tumour were occasionally found. The tumour strain specificity was proved on the following strains of mice: BR and BN strains, and those called A, RIII and Swiss mice. The tumour did not take except in one, of the 50 A mice; 6 takes were obtained among 48 mice of RIII strain (12.5%), as well as 5 among 48 Swiss mice (10.3%). The findings suggest a high degree of tumour strain specificity. No essential influence was noted of oestrogens, progesterone and testosterone on the transplantability.

APPROVED FOR RELEASE: 08/25/2000 CIA-RDP86-00513R000411620010-6"

"APPROVED FOR RELEASE: 08/25/2000 CIA-RDP86-00513R000411620010-6

POLAND/Human and Animal Physiology - (Normal and Pathological). T
Action of Physical Factors. Ionizing Radiation.

Abs Jour : Ref Zhur Biol., No 4, 1959, 18070

Author : Vorbrodt, Krzysztof; Godlewski, Henryk; Dux, Anna
Inst : -
Title : Changes in the Relative Content of Nucleic Acids in the Epidermis of Rats in Local Irradiation

Orig Pub : Folia morphol., 1958, 9, No 1, 39-48

Abstract : With the contact apparatus of Sholl the skin of the hip of white rats was irradiated and the intensity was studied of histochemical reactions to nucleic acids after 3, 6 and 24 hours. DNA were discovered according to the method of Felgen, RNA according to the method of Brashe. The intensity of reactions was determined microphotometrically; the intensity of metachromasy beta by means of metachromatic index. Immediately after irradiation, the decrease of reactions to nucleic acids was noted; in subsequent

Card 1/2

APPROVED FOR RELEASE: 08/25/2000 CIA-RDP86-00513R000411620010-6"

"APPROVED FOR RELEASE: 08/25/2000 CIA-RDP86-00513R000411620010-6

POLAND/Human and Animal Physiology - (Normal and Pathological). T
Action of Physical Factors. Ionizing Radiation.

Abs Jour : Ref Zhur Biol., No 4, 1959, 18070

hours a return to control values. -- From the author's resume.

Card 2/2

APPROVED FOR RELEASE: 08/25/2000 CIA-RDP86-00513R000411620010-6"

"APPROVED FOR RELEASE: 08/25/2000 CIA-RDP86-00513R000411620010-6

DUX, Anna

London center for laboratory animals and the International Committee on Laboratory Animals. Postepy hig. med. dosw. 12 no.5:481-490 1958.
(LABORATORY ANIMALS,
London center for Laboratory animals & Internat. Committee on Laboratory Animals (Pol))

APPROVED FOR RELEASE: 08/25/2000 CIA-RDP86-00513R000411620010-6"

"APPROVED FOR RELEASE: 08/25/2000 CIA-RDP86-00513R000411620010-6

DUX, Erikne

"New method for evaluation logistic function" by G. Tintner. Reviewed by Mrs. Erik Dux. Stat szemle 38 no.4:436 Ap '60.

APPROVED FOR RELEASE: 08/25/2000 CIA-RDP86-00513R000411620010-6"

"APPROVED FOR RELEASE: 08/25/2000 CIA-RDP86-00513R000411620010-6

DUX, E.

GABOR, M.; DUX, E.

Experimental effect of hematoxylin and derivatives on capillary resistance. Magy.belorv.arch. 4 no.3:120-121 1951. (CIML 21:1)

1. Doctors. 2. Pharmaceutical Institute (Director -- Prof.Dr. Miklos Jancso), Szeged Medical University.

APPROVED FOR RELEASE: 08/25/2000 CIA-RDP86-00513R000411620010-6"

"APPROVED FOR RELEASE: 08/25/2000 CIA-RDP86-00513R000411620010-6

GABOR, M.;DUX, E.;KISS, L.

Antagonism between coagulation inhibitors and vitamin P stimulants. Acta physiol. hung. 3 no.1:195-198 1952. (CIML 24:3)

1. Of the Institute of Pharmacology of Szeged University.

APPROVED FOR RELEASE: 08/25/2000 CIA-RDP86-00513R000411620010-6"

"APPROVED FOR RELEASE: 08/25/2000 CIA-RDP86-00513R000411620010-6

GABOR, M.; DUX, E.

The experimental effect of hematoxylin and related derivatives on capillary resistance. Acta physiol. hung. 3 no.2:409-413 1952. (CIML 24:3)

1. Of the Institute of Pharmacology of Szeged University.

APPROVED FOR RELEASE: 08/25/2000 CIA-RDP86-00513R000411620010-6"

"APPROVED FOR RELEASE: 08/25/2000 CIA-RDP86-00513R000411620010-6

DUX-E

2

"241 Vascular effects of anticoagulants [illegible]

depressed capillary resistance [illegible] dine Blue or protamine sulphate antagonised the resistance diminishing action of heparin. [illegible]

APPROVED FOR RELEASE: 08/25/2000 CIA-RDP86-00513R000411620010-6"

"APPROVED FOR RELEASE: 08/25/2000 CIA-RDP86-00513R000411620010-6

DUX, E

IVADY, Gyula; DUX, Erno, Dr.

Bilirubin tolerance of newborn rats in anoxic milieu. Gyermekgyogyaszat 8 no.5-6:169-175 May-June 57.

1. A Szegedi Orvostudomanyi Egyetem Gyermekklinikajanak (Igazgato: Walter Karoly dr. egyetemi tanar) kozlemenye.

(BILIRUBIN
tolerance of newborn rats in anoxic milieu (Hun))
(ANOXIA, exper.
bilirubin tolerance of newborn rats in anoxic milieu (Hun))

APPROVED FOR RELEASE: 08/25/2000 CIA-RDP86-00513R000411620010-6"

"APPROVED FOR RELEASE: 08/25/2000 CIA-RDP86-00513R000411620010-6

DUX, ERNO

HUNGARY/Human and Animal Physiology - Blood Circulations. Vessels. T-6

Abs Jour : Dux, Erno; Gabor, Miklos
Inst : -
Title : The Significance of ACTH and Heparin in Regulating Capillaric Resistibility.

Orig Pub : Kiserl. orvostud., 1957, 9, No 1, 62-64

Abstract : Heparin did not produce the usually observed decrease of capillaric resistibility in rats which received ACTH for some length of time. Both the ACTH-heparin complex and the cortisone-somatotropic hormone complex participate in regulating capillaric resistibility. -- From the authors' summary.

Card 1/1

APPROVED FOR RELEASE: 08/25/2000 CIA-RDP86-00513R000411620010-6"

"APPROVED FOR RELEASE: 08/25/2000 CIA-RDP86-00513R000411620010-6

DUX, Erno; KOVACS, M. Iren

A case of Pelger-Huet maganomaly of leukocytes in infant. Gyermekgyogyaszat 9 no.1-3:58-67 Jan-Mar 58.

1. A Szegedi Orvostudomanyi Egyetem Gyermekklinikajanak (Igazgato: Waltner Karoly dr. egyetemi tanar) kozlemenye.
(LEUKOCYTES
Pelger-Huet anomaly in inf., case report (Hun))

APPROVED FOR RELEASE: 08/25/2000 CIA-RDP86-00513R000411620010-6"

"APPROVED FOR RELEASE: 08/25/2000 CIA-RDP86-00513R000411620010-6

DUX, Erno, dr.; GIMESY, Ferenc, dr.; SZABADOS, Terez, dr.

Severe hemorrhagic diathesis after repeated exsanguination-transfusion. Orv.hetil.101 no.33:1170-1174 14 Ag '60.

1. Szegedi Orvostudomanyi Egyetem, Gyermekklinika
(BLOOD GROUPS)
(BLOOD TRANSFUSION compl)
(HEMORRHAGIC DIATHESIS)

APPROVED FOR RELEASE: 08/25/2000 CIA-RDP86-00513R000411620010-6"

"APPROVED FOR RELEASE: 08/25/2000 CIA-RDP86-00513R000411620010-6

DUX, ERNO (DR)

IVADY, Gyula
SURNAME, Given Names

6

Country: Hungary

Academic Degrees: Dr

Affiliation: Pediatrics Clinic (Gyermekklinika) of the Szeged Medical University (Szegedi Orvostudomanyi Egyetem). Director: professor Dr Karoly WALTNER.

Source: Budapest, Gyermekgyogyaszat, No 6, Jun 61, pp 182-189

Data: "Studies of the Phagocytosis of the Leukocytes of Infants with Interstitial Pneumonia."

Co-authors:

DUX, Erno, Dr. (Affiliation same as above.)

ILLYES, Maria, Dr. (" " " ")

APPROVED FOR RELEASE: 08/25/2000 CIA-RDP86-00513R000411620010-6"

"APPROVED FOR RELEASE: 08/25/2000 CIA-RDP86-00513R000411620010-6

DUX, Erno, dr.; ZENGEI, Klara, dr.

A case of Cruveilhier-Baumgarten syndrome in a child. Gyermekgyogyaszat 12 no.4:121-128 Ap '61.

1. A Szegedi Orvostudomanyi Egyetem Gyermekklinkajanak (Igazgato: Waltner Karoly dr. egyetemi tanar) kozlemenye.

(LIVER CIRRHOSIS in inf & child)

APPROVED FOR RELEASE: 08/25/2000 CIA-RDP86-00513R000411620010-6"

"APPROVED FOR RELEASE: 08/25/2000 CIA-RDP86-00513R000411620010-6

IVADY, Gyula, dr.; DUX, Erno, dr.; ILLYES, Maria, dr.

Studies on the phagocyte activity of leukocytes in infants with interstitial pneumonia. Gyermekgyogyaszat 12 no.6:182-189 Je '61.

1. A Szegedi Orvostudomanyi Egyetem Gyermekklinikajanak (Igazgato: Dr. Waltner Karoly egyetemi tanar) kozlemenye.

(PNEUMONIA INTERSTITIAL PLASMA CELL blood)
(PHAGOCYTOSIS in inf & child)
(BLOOD PROTEINS in inf & child)

APPROVED FOR RELEASE: 08/25/2000 CIA-RDP86-00513R000411620010-6"

"APPROVED FOR RELEASE: 08/25/2000 CIA-RDP86-00513R000411620010-6

DUX, Erno, dr.; KOVACS, Zoltan, dr.; GIMESY, Ferenc, dr.

Data on the problem of humoral regulation of thrombopoiesis (Studies in connection with thrombopenia arising after exchange transfusion in newborn infants). Orv. hetil. 103 no.5:196-204 F '62.

1. Szegedi Orvostudomanyi Egyetem, Gyermekklinika.

(BLOOD TRANSFUSION in inf. & child.)
(ERYTHROBLASTOSIS FETAL therapy)
(THROMBOPENIA in inf. & child.)

APPROVED FOR RELEASE: 08/25/2000 CIA-RDP86-00513R000411620010-6"

"APPROVED FOR RELEASE: 08/25/2000 CIA-RDP86-00513R000411620010-6

HUNGARY

DUX, Erno, Dr; KOVACS, Zoltan, Dr; PATAKI, Lajos, Dr; Medical University of Szeged, Pediatric Clinic (Szegedi Orvostudomanyi Egyetem, Gyermekklinika).

"The Changes in the Thrombocyte Number After Exchange Transfusions in the Newborn."

Budapest, Orvosi Hetilap, Vol 104, No 35, 1 Sept 63, pages 1641-1645.

Abstract: [Authors' Hungarian summary] The changes in the thrombocyte number of newborn after one or two exchange transfusions have been followed by the authors. Before transfusion, the thrombocyte number was identical with that of normal newborn. The number of blood platelets always decreased during the transfusion. The original thrombocyte number was reestablished on the sixth day after a single exchange transfusion. This was followed by a mild, transient thrombocytosis. After double exchange transfusions, the thrombopenia corrected itself more rapidly and the thrombocytosis which followed was also more pronounced. The changes in the thrombocyte number normalized 8-9 days after the transfusions. In the authors' opinion, the thrombopenia is corrected by an increase in the thrombopoietin content of the plasma. Repeated blood exchange provides an increased stimulation for thrombopoietin production. 24 Western, 2 Hungarian references.

APPROVED FOR RELEASE: 08/25/2000 CIA-RDP86-00513R000411620010-6"

"APPROVED FOR RELEASE: 08/25/2000 CIA-RDP86-00513R000411620010-6

DUX, Erno, dr.; BAKACSI, Gyula, dr.; KOVACS, Zoltan, dr.; PATAKI, Lajos, dr.

Studies on the thrombopoietic activity of the normal blood plasma and of the plasma of newborn infants exposed to repeated exchanged transfusions. (Preliminary report). Orv. hetil. 105 no.27:1276-1277 5 Jl'64

1. Szegedi Orvostudomanyi Egyetem, Gyermekklinika (Igazgato: Boda, Domokos, dr.).

APPROVED FOR RELEASE: 08/25/2000 CIA-RDP86-00513R000411620010-6"

"APPROVED FOR RELEASE: 08/25/2000 CIA-RDP86-00513R000411620010-6

TOTH, Gyorgy, dr.; VIRAG, Istvan, dr.; DUX, Erno, dr.; ROMAN, Ferenc, dr.

Bone marrow disease in an infant caused by antiepileptic treatment (Sacerno) of the mother during pregnancy. Orv. hetil. 106 no.22:1029-1030 30 My'65.

1. Szegedi Orvostudomanyi Egyetem, Gyermekklinika.

APPROVED FOR RELEASE: 08/25/2000 CIA-RDP86-00513R000411620010-6"

"APPROVED FOR RELEASE: 08/25/2000 CIA-RDP86-00513R000411620010-6

DUX, K.

Neuro-endocrine regulation. Pat. polska 3 no. 3:193-205 July-Sept 1952. (CIML 23:5)

1. Of the Institute of General and Experimental Pathology(Head--Prof. K. Dux, M.D.) of Silesian Medical Academy in Rokitnica. 2. Summary given before the Pavlovian Conference on 27 Dec, 1951 in Krynica.

APPROVED FOR RELEASE: 08/25/2000 CIA-RDP86-00513R000411620010-6"

"APPROVED FOR RELEASE: 08/25/2000 CIA-RDP86-00513R000411620010-6

DUX, K.; DUX, A.

Biological and histological characteristics of transplantable mouse cancer obtained at the Institute of Oncology, Gliwice Division. Pat. polska 3 no. 3:217-223 July-Sept 1952. (CIML 23:5)

1. Of the Department of the Biopathology of Cancer (Head--Prof. K. Dux, M.D.) of Gliwice Division of the Institute of Oncology. 2. Report given before the Second Congress of Anatomo-Pathologists in Krakow 27-29 Sept, 1951.

APPROVED FOR RELEASE: 08/25/2000 CIA-RDP86-00513R000411620010-6"

"APPROVED FOR RELEASE: 08/25/2000 CIA-RDP86-00513R000411620010-6

DUX, K.

Sensitivity of transplanted vaginal mucosa to œstrogens. K. Dux and J. Eichorn (*Folia biol., Cracow*, 1953, 1, 30—49).—In 20 castrated and sexually-immature guinea-pigs, respectively, the vaginal mucosa was autotransplanted under the skin of the ear concha, the mamma, and the genitals. After the wound had healed, the animals were injected with œstrogens, œstrogens and progesterone, and acetylcholine, respectively. From vaginal smears, taken at the time of max. reaction to the hormone injection, and from histological examinations, it was found that the reaction of the epithelium covering the transplanted mucosa fragments to œstrogen injections is, though weaker, qual. the same as that of the epithelium *in situ*. The epithelium lining the transplantation pockets did not respond to the injected hormones; its character depended upon the region of the body, *e.g.*, the mucosa transplanted into the ear region showed only a slight tendency to epithelisation compared with those transplanted to the connective tissue of the mamma or the genitals. The former became thick, with multiple layers and a tendency to keratinisation, whereas the two latter retained the character of the mucous membrane. The large differences between the various grafts are related to differences in the neurotrophic properties of the connective tissue in various regions of the body (innervation and vascularisation). Thus, by altering the neurotrophic character of the connective-tissue substrate, the character and function of the epithelium may correspondingly be altered. A. Storrer

Zaklad Patologii Ogolnej i Doswiadczalnej Slaskiej Akademii Medycznej im. Ludwika Waryskiego.

APPROVED FOR RELEASE: 08/25/2000 CIA-RDP86-00513R000411620010-6"

"APPROVED FOR RELEASE: 08/25/2000 CIA-RDP86-00513R000411620010-6

DUX, Kazimierz; OTTOWICZ, Jerzy

Effect of silica dust on culture of fibroblasts in vitro. Fol. morph., Warsz. 5 no.3:173-176 1954.

1. Z Zakladu Patologii Ogolnej i Doswiadczalnej Slaskiej Akademii Medycznej im. L.Warynskiego.

(CONNECTIVE TISSUE, effects of drugs on, silica dust on fibroblast culture)
(SILICA, effects, on fibroblast culture)
(TISSUE CULTURE, fibroblasts, eff. of silica dust)

APPROVED FOR RELEASE: 08/25/2000 CIA-RDP86-00513R000411620010-6"

"APPROVED FOR RELEASE: 08/25/2000 CIA-RDP86-00513R000411620010-6

DUX, Kazimierz

Epithelioma of the vagina induced in mice by a special autotransplantation. Postepy wiedzy med. 2 no.3:256-270 July-Sept 1955.

1. Z Instytutu Onkologii, Oddzialu w Gliwicach. Dyrektor: dr. J. Siiecki, (Zaklad Biologii Nowotworow. Kierownik: prof. dr. K. Dux).

(NEOPLASMS, experimental
epithelioma of vagina induced by autotransplantation in mice.)
(VAGINA, neoplasms
epithelioma, experimental, induced by autotransplantation in mice.)

APPROVED FOR RELEASE: 08/25/2000 CIA-RDP86-00513R000411620010-6"

"APPROVED FOR RELEASE: 08/25/2000 CIA-RDP86-00513R000411620010-6

DUX, Kazimierz

Antithesis to some statements by professor Ber in his work "Dialectic method in endocrinology". Postepy wiedzy med. 2 no.3:279-292 July-Sept 1955.

(ENDOCRINOLOGY
dialectic method in, critic.)

APPROVED FOR RELEASE: 08/25/2000 CIA-RDP86-00513R000411620010-6"

"APPROVED FOR RELEASE: 08/25/2000 CIA-RDP86-00513R000411620010-6

DUX, Kazimierz; GRACZYKOWSKA, Alicja

Endocrine function of the gonads in female fors of male pseudohermaphroditism. Postepy wiedzy med. 2 no.4:353-368 Oct-Dec '55.

1. II Klinika Chor.Wewn. A.M. w Poznaniu Kierownik: prof. dr. J. Roguski Oddzial Endokrynologiczny I Kliniki Chor. Wewn. Sl. A.M. w Zabrzu Kierownik: prof. dr J. Japa. [Zaklad Patologii Ogolnej i Doswiadczlnej Sl. A.M. w Zabrzu. Kierownik: prof. dr K. Dux.]

(HERMAPHRODITISM,
pseudohermaphroditism, gonadal funct. in)
(GONADS, physiology,
in pseudohermaphroditism)

APPROVED FOR RELEASE: 08/25/2000 CIA-RDP86-00513R000411620010-6"

"APPROVED FOR RELEASE: 08/25/2000 CIA-RDP86-00513R000411620010-6

Dux, K.

848. *Epitheliomas of the vagina provoked in mice by autotransplantation* Epithéliomas du vagin provoqués chez la souris par la méthode particulière de l'autotransplantation. Dux K. Inst. d'Oncol. et Lab. de Biol., Gliwice, Pologne *C. R. Ass. Anatomistes (Paris)* 1956, 3/90 (491–495) Illus. 5

Experiments of autotransplantation of vaginal epithelium on pathological connective tissue modified previously by the action of a carcinogenic substance, show the possibility of development of a carcinoma in the vaginal mucosa, i.e. of a special type of keratinizing and adenoid epithelioma forming after implantation into other animals.

Beau – Nancy

APPROVED FOR RELEASE: 08/25/2000 CIA-RDP86-00513R000411620010-6"

"APPROVED FOR RELEASE: 08/25/2000 CIA-RDP86-00513R000411620010-6

DUX, Kazimierz; NARBUTT, Boleslaw; BUNTNER, Barbara

Excretion of estrogens and 17-ketosteroids in men given chorionic gonadotropins by intravenous drip. Polskie arch. med. wewn. 26 no.1:13-19 1956.

1. Zaklad Patologii Ogolnej i Doswiadczalnej Sl. A. M. w Zabrzu Kierownik: prof. dr. med. K. Dux Zaklad Biologii Nowotworow Instytutu Onkologii w Gliwicach Dyrektor: dr. med. J. Swiecicki Oddzial Endokrynologiczny I. Klin. Chor. Wewn. Sl. A. M. w Zabrzu Kierownik: prof. dr. med. J. Japa Gliwice, ul. Marchlewskiego 7 m. 5.

(GONADOTROPINS, CHORIONIC, effects
on estrogen & 17-ketosteroid excretion in men after admin. by intravenous drip. (Pol))

(ESTROGENS, in urine
eff. of intravenous drip admin. of chorionic gonadotropins in men. (Pol))

(STEROIDS, in urine
eff. of intravenous drip admin. of chorionic gonadotropins in men. (Pol))

APPROVED FOR RELEASE: 08/25/2000 CIA-RDP86-00513R000411620010-6"

"APPROVED FOR RELEASE: 08/25/2000 CIA-RDP86-00513R000411620010-6

DUX, Kazimierz; DABROWSKA, Krystyna

Determination of genetic (chromosomal) sex in human subjects.
Postepy wiedzy med. 4 no.1:47-54 1957.

1. Z Zakladu Biologii Nowotworow Instytut Onkologii im. Marii Curie-Sklodowskiej w Warszawie.
(SEX CHARACTERISTICS, determination
chromosomal sex, review (Pol))

APPROVED FOR RELEASE: 08/25/2000 CIA-RDP86-00513R000411620010-6"

"APPROVED FOR RELEASE: 08/25/2000 CIA-RDP86-00513R000411620010-6

1331. MODIFICATIONS ON ANTIGENIC STRUCTURE OF GUÉRIN'S RAT EPITHELIOMA AS A RESULT OF HETEROTRANSPLANTATION ON MICE - O zmianach własności antygenowych nabłoniaka szczurzego Guérin w wyniku heterotransplantacji na myszach - Dux K., Ślopek S., Breguła U. and Fogel M. Inst. Onkol. im. Marii Curie-Skłodowskiej, Warszawa; Inst. Immunol. i Terapii Dośw., Wrocław - ARCH. IMMUNOL. TERAP. DOŚW. (Wrocław) 1957, 5 (329-345) Tables 6 Illus. 3

Guérin rat epithelioma was passaged on mice for a prolonged period of time (104 days) either by changing the heterologous host or by applying the zigzag method, i.e., using alternating transplantation from rat to mice and vice versa. This transplantation caused no changes in the morphological picture or the growth rate of the tumour. However, in complement fixation and antibody absorption tests, repeated 3 times, there were differences in the antigenic structure of the tumour as compared to the control Guérin epithelioma. After passaging in rats for several months, the neoplasm did not lose its new properties acquired 22 months previously in the mouse. The authors assume that this change might be regarded as a permanent transformation of the antigenic structure of the tumour as a result of the adaptation of the neoplastic tissue to mouse antibodies. Albert - Wrocław (V, 16)

APPROVED FOR RELEASE: 08/25/2000 CIA-RDP86-00513R000411620010-6"

"APPROVED FOR RELEASE: 08/25/2000 CIA-RDP86-00513R000411620010-6

DUX, K.

896. *The modifications of the antigenic structure of the Guérin epithelioma after heterografting in mice* Sur les modifications de la structure antigénique de l'épithélioma Guérin au cours des hétérogreffes sur les souris. DUX K., SLOPEK S., BREGULA U. and FOGEL M. Inst. d'Oncol., Varsovie; Inst. d'Immunol. et de Thérap. Exp., Wroclaw, Pologne *Bull. Ass. franç. Cancer* 1957, 44/1 (72–87) Graphs 1 Tables 5 Illus. 2

If Guérin tumours (from rats) are transplanted to mice (continuously for a long time or 'zigzag'), no morphological alterations occur, and when the tumours are transplanted back to rats, they prove to have retained their original growth capacity. The antigenic structure of the tumours (complement fixation, absorption of antibodies) appears to have been altered, however, very probably due to adaptation of the neoplastic cells to antibodies formed in the murine organism. Calì – Naples

APPROVED FOR RELEASE: 08/25/2000 CIA-RDP86-00513R000411620010-6"

"APPROVED FOR RELEASE: 08/25/2000 CIA-RDP86-00513R000411620010-6

EXCERPTA MEDICA Sec 5 Vol 12/8 General Path. Aug 59

2169. TRANSPLANTABLE VAGINAL TUMOURS IN MICE - O przeszczepialnych nabłoniakach pochwy u myszy - Dux K. Zakł. Biol. Nowotworów Inst. Onkol. im. Marii Skłodowskiej-Curie, Warszawa - NOWOTWORY 1958, 8/3-4 (187-193) Illus. 18

By the combined application of methylcholanthrene and oestrogens on the s.c. transplants of vaginal mucosa, 3 neoplasms were obtained, including 2 planocellular papillomata which were transplantable and maintained their character of a highly mature tumour. After transplantation these tumours were found to grow slowly and to induce mortality only after 5-6 months. One of these tumours showed extensive skin infiltrations resulting in its ulceration and hence in secondary infections, whereas the 2nd did not affect the skin but infiltrated the muscles. Taking advantage of the fact that the tumour originated from the vaginal mucosa, the effect of sex hormones and castration was tested. After administration of oestrogens the neoplasms exhibited a more marked cornification as compared with the controls. In the castrated animals, cornification was slighter, the neoplastic cells being atrophic and small. Testosterone exerted a pronouncedly stimulating effect on the neoplastic growth, and the cornification process was weaker. The tumours of animals which had received progesterone and tumours in pregnant animals did not differ from the controls, but they showed leucocytary infiltrations similar to those present in the vaginal epithelium during the copulation time. Further investigations of these tumours are in progress. Albert - Wrocław (V, 16)

APPROVED FOR RELEASE: 08/25/2000 CIA-RDP86-00513R000411620010-6"

"APPROVED FOR RELEASE: 08/25/2000 CIA-RDP86-00513R000411620010-6

EXCERPTA MEDICA Sec 6 Vol 13/7 Internal Med. July 59

3940. EXCRETION OF OESTROGENS AND FSH IN KLINEFELTER'S SYNDROME - Badania nad wydalaniem estrogenów i FSH w zespole Klinefeltera - Dux K. Inst. Onkol., Odd. Gliwicach; Inst. Onkol. im Marii Sklodowskiej-Curie, Warszawa - ENDOKR. POL. 1958, 9/1 (13-25) Tables 2 Illus. 8

Two typical cases of Klinefelter's syndrome are described. In both cases female sex chromatin was found in cells of the oral mucosa and in Sertoli and Leydig cells. Biopsy of the testes showed typical seminiferous tubule dysgenesis. Leydig cells were either degenerated or hypertrophic. The latter formed hyperplastic adenomatous nodules. In both cases the excretion of FSH and oestrogens in urine was increased. After the injection of oestrogens the amount of FSH in urine decreased in both patients. That proves that the hypothalamo-hypophyseal system in Klinefelter's syndrome may respond to oestrogens. Simultaneous excretion of the increased amounts of FSH and oestrogens in Klinefelter's syndrome shows the decreased sensitivity of the hypothalamo-hypophyseal system to oestrogens. In both cases mammotrophic hormones were found in the urine. The high production of oestrogens and mammotrophic hormones and the sensitivity of target tissues characteristic for female genotype may explain gynaecomasty and some other feminization phenomena in Klinefelter's syndrome. A survey of theories of aetiology and pathogenesis of Klinefelter's syndrome is presented and the pathogenesis of certain endocrinological phenomena is discussed.

(VI, 3)

APPROVED FOR RELEASE: 08/25/2000 CIA-RDP86-00513R000411620010-6"

"APPROVED FOR RELEASE: 08/25/2000 CIA-RDP86-00513R000411620010-6

DUX, K.; CZARNOMSKA, Alina

Influence of estrogens on alkaline phosphatase activity in autotransplants of vaginal epithelium. Folia biol 8 no.4:283-290 '60.
(EEAI 10:6)

1. Institute of Oncology, Department of Tumor Biology, Warszawa.
Head: J.Laskowski, M.D.
(ESTROGENIC HORMONES)
(PHOSPHATASES)
(ALKALINITY)
(VAGINA)
(EPITHELIUM)

APPROVED FOR RELEASE: 08/25/2000 CIA-RDP86-00513R000411620010-6"

"APPROVED FOR RELEASE: 08/25/2000 CIA-RDP86-00513R000411620010-6

DUX,K.; CZARNOMSKA,Alina.

Time of survival of heterografts of Guerin's rat tumer in mice.
Folia biologica 9 no.4:319-323 '61

1. Institute of Oncology, Department of Tumor Biology, Warszawa
Head: J. Laskowski, M.D.

APPROVED FOR RELEASE: 08/25/2000 CIA-RDP86-00513R000411620010-6"

"APPROVED FOR RELEASE: 08/25/2000 CIA-RDP86-00513R000411620010-6

CZARNOMSKA, Alina; DUX, K.

Histological investigations on heterologous grafts of the original Guerin rat tumor and its sublines surviving in mice of various strains. Folia biol 10 no. 1:37-45 '62.

1. Institute of Oncology, Department of Tumor Biology, Warsaw. Head: J. Laskowski, M.D.

APPROVED FOR RELEASE: 08/25/2000 CIA-RDP86-00513R000411620010-6"

"APPROVED FOR RELEASE: 08/25/2000 CIA-RDP86-00513R000411620010-6

DUX, Kazimierz

The European Conference of the Interantional Union against Cancer on the subject of tumor biology; Warsaw, May 22-27, 1961). Nauka Polska 10 no.1:133-136 Ja-F '62.

1. Instytut Onkologii, Warszawa.

APPROVED FOR RELEASE: 08/25/2000 CIA-RDP86-00513R000411620010-6"

"APPROVED FOR RELEASE: 08/25/2000 CIA-RDP86-00513R000411620010-6

WROBLEWSKI, Waclaw; GORSKI, Czeslaw; PASZKO, Zygmunt; DUX, Kazimierz

Surgically cured case of adenoma of the adrenal cortex in an 8-year-old girl with Cushing's tumor and excessive secretion of androgens and estrogens. Endokry. pol. 13 no.3:347-364 '62.

1. Centralny Szpital MSW Oddzialu Pediatryczny Kierownik: prof. dr. T. Chrapowicki Instytut Onkologii im. Marii Sklodowskiej-Curie w Warszawie Dyrektor: prof. dr J. Laskowski Kierownik Oddzialu Chirurgicznego: prof. dr T. Koszarowski Zaklad Biologii Nowotworow Kierownik: prof. dr. K. Dux.

(ADRENAL CORTEX neopl) (ADENOMA in inf & child)
(CUSING SYNDROME in inf & child) (ANDROGENS urine)
(ESTROGENS urine)

APPROVED FOR RELEASE: 08/25/2000 CIA-RDP86-00513R000411620010-6"

"APPROVED FOR RELEASE: 08/25/2000 CIA-RDP86-00513R000411620010-6

DUX, Kazimierz

Eighth International Cancer Congress, Moscow, July 22-28, 1962.
Nauka polska 11 no.3:145-148 My-Je '63.

1. Instytut Onkologii im. Marii Sklodowskiej-Curie, Warszawa.

APPROVED FOR RELEASE: 08/25/2000 CIA-RDP86-00513R000411620010-6"

"APPROVED FOR RELEASE: 08/25/2000 CIA-RDP86-00513R000411620010-6

DUX, Kazimierz; GADEK, Andrzej

Leydig-cell adenomas in testes implanted to female rats.
Nowotwory 13 no.2:113-123 '63.

1. Z Zakladu Biologii Nowotworow Instytutu Onkologii im. Marii Sklodowskiej-Curie w Warszawie Kierownik: prof. dr med. K. Dux i z Zakladu Patologii Doswiadczalnej PAN Kierownik: prof. dr med. L. Paszkiewicz.
(LEYDIG CELL TUMOR) (NEOPLASMS, EXPERIMENTAL)
(TESTES) (TRANSPLANTATION)

APPROVED FOR RELEASE: 08/25/2000 CIA-RDP86-00513R000411620010-6"

"APPROVED FOR RELEASE: 08/25/2000 CIA-RDP86-00513R000411620010-6

POLAND

SZCZEPANSKI, Maciej, Institute of Experimental Pathology (Zaklad Patologii Doswiadczalnej) of PAN [Polska Akademia Nauk, Polish Academy of Sciences] in Krakow (Director: Prof. Dr. L. PASZKIEWICZ) and of the Laboratory of Experimental Endocrinology (Pracownia Endokrynologii Doswiadczalnej) (Director: Prof. Dr. K. DUX)

"Control of Thyrotropic Activity of Hypohysis--Attempt at Cybernetic Conception."

Warsaw, Postepy Higieny i Medycyny Doswiadczalnej, Vol 17, No 1-2, 63, pp 127-148.

Abstract: Author reviews the four methods employed experimentally to study the control of the thyrotropic activity of the hypophysis (tracing I^{131}, stimulation of other endocrine glands, stimulation of other systems of organism, and external stimuli) and summarizes the employed experiments and findings from the literature. He then sets up a negative reversible coupling cybernetic system, which is simultaneously a relatively perspectively isolated system, for the thyrotrophin excretion control mechanism, describ-

1/2

APPROVED FOR RELEASE: 08/25/2000 CIA-RDP86-00513R000411620010-6"

"APPROVED FOR RELEASE: 08/25/2000 CIA-RDP86-00513R000411620010-6

POLAND

PASZKO, Zygmunt and PRZEZDZIECKI, Zdzislaw, Department of Neoplasm Biology (Zaklad Biologii Nowotworow) (Director: Prof. Dr. K. DUX) of the Oncology Institute (Instytut Onkologii) im. M. Sklodowskiej-Curie in Warsaw (Director: Prof. Dr. J. LASKOWSKI)

"Enzymes of Alimentary Tract of Domestic Snail for Determination of Steroid Esters."

Warsaw, Postepy Higieny i Medycyny Doswiadczalnej, Vol 17, No 3, 63, pp 361-367.

Abstract: The authors have successfully obtained preparations of beta-glucuronidase and sulfatase from the alimentary juices of the "winniczek" snail [genus helicidae], abundant in Polish forests throughout most of the year. They describe the preparation and properties, including optimum dilutions and pH, and comment on their durability. These preparations can now replace the expensive importation of the above enzymes, used in investigations of steroid esters. All 20 references are Western.

- END -

1/1

1588, 2473

CSO: 2000-N

APPROVED FOR RELEASE: 08/25/2000 CIA-RDP86-00513R000411620010-6"

"APPROVED FOR RELEASE: 08/25/2000 CIA-RDP86-00513R000411620010-6

DUX, Kazimierz

Surgical problems of the endocrine glands. Polski przegl. chir 35 no.9:871-879 '63.

APPROVED FOR RELEASE: 08/25/2000 CIA-RDP86-00513R000411620010-6"

"APPROVED FOR RELEASE: 08/25/2000 CIA-RDP86-00513R000411620010-6

DUX WIKTORIA

Inhibition of typhoid bacteria by fecal streptococci

Wiktoria Dux (Zakład Mikrobiol. [illegible]

[illegible] the growth [illegible] media due to the [illegible] used for the formation [illegible] vitamin components of the medium. [illegible] fecal streptococci could not be demonstrated.

I. Z. Roterts

APPROVED FOR RELEASE: 08/25/2000 CIA-RDP86-00513R000411620010-6"

"APPROVED FOR RELEASE: 08/25/2000 CIA-RDP86-00513R000411620010-6

DUX, Wiktoria

Studies on inhibition of growth of Salmonella typhosa by Streptococcus faecalis. Med. dosw. mikrob. 8 no.1:29-35 1956.

1. Z Zakladu Mikrobiologii Pomorskiej A. M. w Szczecinie.
(SALMONELLA TYPHOSA,
antag, by Streptoc. faecalis. (Pol))
(STREPTOCOCCUS,
faecalis, entag. of Salmonella typhosa. (Pol))

APPROVED FOR RELEASE: 08/25/2000 CIA-RDP86-00513R000411620010-6"

"APPROVED FOR RELEASE: 08/25/2000 CIA-RDP86-00513R000411620010-6

APPROVED FOR RELEASE: 08/25/2000 CIA-RDP86-00513R000411620010-6"

"APPROVED FOR RELEASE: 08/25/2000 CIA-RDP86-00513R000411620010-6

ACCESSION NR: AP4018703 S/0145/63/000/012/0066/0070

AUTHOR: Duydenko, B. N. (Engineer)

TITLE: Creep of a circular plate clamped around its perimeter and uniformly loaded

SOURCE: IVUZ. Mashinostroyeniye, no. 12, 1963, 66-70

TOPIC TAGS: creep, circular plate, uniformly loaded plate, equilibrium equation, strain rate

ABSTRACT: An attempt was made to correct the apparent contradictions of the analysis presented by B. Venkatraman and P. G. Hodge (Creep behavior of circular plates, "Journal of the Mechanics and Physics of Solids," 1958, Vol. 6, No. 2) on the creep behavior of a damped circular plate. The equations of equilibrium, relations between deformations and displacements, and relations between stress components and strain rate components are derived, based on the above reference. The equations are modified for four ranges of the parameter $\rho = \frac{r}{a}$ (where r = variable radius, a = outside radius) corresponding to four regions in the deformation ellipse and the boundary conditions are formulated. The equations are

Card 1/2

APPROVED FOR RELEASE: 08/25/2000 CIA-RDP86-00513R000411620010-6"

"APPROVED FOR RELEASE: 08/25/2000 CIA-RDP86-00513R000411620010-6

ACCESSION NR: AP4030378 S/0145/64/000/002/0036/0045

AUTHOR: Duydenko, B. N. (Engineer)

TITLE: Solution of a circular plate under axially symmetric loading with arbitrary nonlinear relationship between stress and strain

SOURCE: IVUZ. Mashinostroyeniye, no. 2, 1964, 36-45

TOPIC TAGS: axially symmetric loading, stress and strain, circular plate, plastic region, deflection moment intensity

ABSTRACT: The deflection of a circular plate supported at its periphery and subjected to a uniform pressure p has been studied beyond the limits of elasticity on the basis of the Tresko--Sen-Venan criterion. Two plastic regions are analyzed under the assumption of "incompressible" plate material. The first, in a region where the deflection moment intensity $M_1 = M_\theta = M_r > 0$ where

$$\left(M_1 = \sqrt{M_r^2 - M_r M_\theta + M_\theta^2}\right.,$$

Card 1/3

APPROVED FOR RELEASE: 08/25/2000 CIA-RDP86-00513R000411620010-6"

"APPROVED FOR RELEASE: 08/25/2000 CIA-RDP86-00513R000411620010-6

ACCESSION NR: AP4030378

and

$$\left.\begin{aligned} M_r &= \int_{-\frac{h}{2}}^{+\frac{h}{2}} \sigma_r z\,dz, \\ M_\theta &= \int_{-\frac{h}{2}}^{+\frac{h}{2}} \sigma_\theta z\,dz \end{aligned}\right\};$$

the second in a region where $M_i = M_\theta > M > 0$. As an example, the stress-strain diagram of 40Kh steel is used and together with stress-strain relationship given by

$$\varepsilon_{i_1} = \frac{\sqrt{2}\,h\left[\int_0^{\varepsilon_{i_1}} \sigma_i \varepsilon_i\, d\varepsilon_i\right]^{\frac{1}{2}}}{2M_i^{\frac{1}{2}}}.$$

Card 2/3

APPROVED FOR RELEASE: 08/25/2000 CIA-RDP86-00513R000411620010-6"

"APPROVED FOR RELEASE: 08/25/2000 CIA-RDP86-00513R000411620010-6

ACCESSION NR: AP4030378

a graph is constructed relating M_i to ε_{il} (h - plate thickness). At the plate support contour the deformation intensity is found to be 0.00385 and the angular deflection moment

$$\overline{M}_\theta = 9.15 \cdot 10^2 \frac{h^2}{pa^2},$$

Orig. art. has: 26 equations and 8 figures.

ASSOCIATION: MVTU im. N. E. Baumana (MVTU)

SUBMITTED: 11Jul63 DATE ACQ: 07May64 ENCL: 00

SUB CODE: AP NO REF SOV: 002 OTHER: 000

Card 3/3

APPROVED FOR RELEASE: 08/25/2000 CIA-RDP86-00513R000411620010-6"

"APPROVED FOR RELEASE: 08/25/2000 CIA-RDP86-00513R000411620010-6

DAYDENKO, B.N., inzh.

Design of circular axisymmetrically loaded plates beyond the elastic limit. Izv. vys. ucheb. zav.; mashinostr. no.9:45-56 '64. (MIRA 17:12)

1. Moskovskoye vysshaye tekhnicheskoye uchilishche imeni N.E. Baumana.

APPROVED FOR RELEASE: 08/25/2000 CIA-RDP86-00513R000411620010-6"

"APPROVED FOR RELEASE: 08/25/2000 CIA-RDP86-00513R000411620010-6

APPROVED FOR RELEASE: 08/25/2000 CIA-RDP86-00513R000411620010-6"

"APPROVED FOR RELEASE: 08/25/2000 CIA-RDP86-00513R000411620010-6

APPROVED FOR RELEASE: 08/25/2000 CIA-RDP86-00513R000411620010-6"

"APPROVED FOR RELEASE: 08/25/2000 CIA-RDP86-00513R000411620010-6

DUYEV, A.M.; MILITSKOVA, Ye.A.

Articles made of plastics having a mother-of-pearl appearance.
Plast.massy no.10:27-31 '60. (MIRA 13:12)
(Plastics)

APPROVED FOR RELEASE: 08/25/2000 CIA-RDP86-00513R000411620010-6"

"APPROVED FOR RELEASE: 08/25/2000 CIA-RDP86-00513R000411620010-6

DUYEV, A.M.

Mechanical finishing of plastic materials. Plast.massy no.5: 67-70 '62. (MIRA 15:4)

(Plastics)

APPROVED FOR RELEASE: 08/25/2000 CIA-RDP86-00513R000411620010-6"

"APPROVED FOR RELEASE: 08/25/2000 CIA-RDP86-00513R000411620010-6

DUYEV, A.M.; MISHURIS, I.Ya.; IOFINOVA, TS.B., red.; TRUSOV, N.S., tekhn. red.

[Manufacture of buttons from synthetic materials] Proizvodstvo pugovits iz sinteticheskikh materialov. Moskva, Gosbytizdat, 1963. 145 p. (MIRA 17:2)

APPROVED FOR RELEASE: 08/25/2000 CIA-RDP86-00513R000411620010-6"

"APPROVED FOR RELEASE: 08/25/2000 CIA-RDP86-00513R000411620010-6

DUYEV, L.T.

Possibility of using electron extraction for the analysis of solids on a mass spectrometer. Trudy Inst. met. no.11:199-204 '62. (MIRA 16:5)

(Mass spectrometry) (Electrons)

APPROVED FOR RELEASE: 08/25/2000 CIA-RDP86-00513R000411620010-6"

"APPROVED FOR RELEASE: 08/25/2000 CIA-RDP86-00513R000411620010-6

CHUPAKHIN, M.S.; GLAVIN, G.G.; DUYEV, L.T.

Polyatomic graphite molecules. Zhur. tekh. fiz. 33 no.10: 1281-1284 O '63. (MIRA 16:11)

APPROVED FOR RELEASE: 08/25/2000 CIA-RDP86-00513R000411620010-6"

"APPROVED FOR RELEASE: 08/25/2000 CIA-RDP86-00513R000411620010-6

PLYATSKOVSKIY, O.A., kand.tekhn.nauk; Prinimali uchastiye: OSLON, N.D.; NODEV, E.O.; DEVYATISIL'NYY, V.I.; SULTINSKIKH, A.N.; SHANIN, P.K.; KUKARSKIKH, V.I.; RAKHNOVETSKIY, L.Y.; DUYEV, V.N.

New technological processes used in rolling 102-170 mm. diameter pipes of stainless steel 1Kh18N9T. Biul.nauch.-tekh.inform.VNITI no.4/5:24-30 '58. (MIRA 15:1)

(Pipe mills)

APPROVED FOR RELEASE: 08/25/2000 CIA-RDP86-00513R000411620010-6"

"APPROVED FOR RELEASE: 08/25/2000 CIA-RDP86-00513R000411620010-6

GOL'DENBERG, A.A., kand.tekhn.nauk, dotsent; [illegible], [illegible].N., inzh.; [illegible]EVA, I.T.

Effect of carbon content and tempering conditions on the strength of hardened low-carbon unalloyed steel. Vest. mashinostr. 46 no.1:67-69 Ja '66. (MIRA 19:1)

APPROVED FOR RELEASE: 08/25/2000 CIA-RDP86-00513R000411620010-6"

"APPROVED FOR RELEASE: 08/25/2000 CIA-RDP86-00513R000411620010-6

MITYUSHKIN, Yu.; DUYLOVSKIY, I.

Introduce progressive practices in winter operations. Stroitel' no.10:9 O '60. (MIRA 13:9)

1. Glavnyy mekhanik tresta Stalinzhilstroy-1 (for Mityushkin).
2. Mariyskiy bumazhnyy kombinat (Volzhsk) (for Duylovskiy).
(Building--Cold weather conditions)

APPROVED FOR RELEASE: 08/25/2000 CIA-RDP86-00513R000411620010-6"

"APPROVED FOR RELEASE: 08/25/2000 CIA-RDP86-00513R000411620010-6

DUYMAKAYEV, Sh.I.; BLOKHIN, M.A.

Degeneracy reading in X-ray spectral analysis by means of the addition of diluents or the element being analyzed. Zav. lab. 31 no.9:1072-1076 '65. (MIRA 18:10)

1. Rostovskiy-na-Donu gosudarstvennyy universitet.

APPROVED FOR RELEASE: 08/25/2000 CIA-RDP86-00513R000411620010-6"

"APPROVED FOR RELEASE: 08/25/2000 CIA-RDP86-00513R000411620010-6

BLOKHIN, M.A.; DUYMAKAYEV, Sh.I.

Optimal X-ray spectral analysis of solutions. Zav. lab. 29 no.9:1061-1064 '63. (MIRA 17:1)

1. Rostovskiy gosudarstvennyy universitet.

APPROVED FOR RELEASE: 08/25/2000 CIA-RDP86-00513R000411620010-6"

"APPROVED FOR RELEASE: 08/25/2000 CIA-RDP86-00513R000411620010-6

BLOKHIN, M.A.; DUYMAKAYEV, Sh.I.

X-ray spectral analysis of multicomponent mixtures. Zav.lab. 30 no.4:425-426 '64. (MIRA 17:4)

1. Rostovskiy-na-Donu gosudarstvennyy universitet.

APPROVED FOR RELEASE: 08/25/2000 CIA-RDP86-00513R000411620010-6"

"APPROVED FOR RELEASE: 08/25/2000 CIA-RDP86-00513R000411620010-6

BLOKHIN, M.A.; DUYMAKAYEV, Sh.I.; KARMANOV, V.I.

Reading of degeneracy in X-ray spectral analysis by calculating the intensity of scattered radiation. Zav. lab. 31 no. 12:1452-1454 '65 (MIRA 19:1)

1. Rostovskiy gosudarstvennyy universitet.

APPROVED FOR RELEASE: 08/25/2000 CIA-RDP86-00513R000411620010-6"

"APPROVED FOR RELEASE: 08/25/2000 CIA-RDP86-00513R000411620010-6

DENISOV, F.P.; DUYSEBAYEV, A.; KOSAREVA, K.V.; CHERENKOV, P.A.

Angular and energy distributions of $\pi^{\pm}$ recoil nuclei in the H^2O (γ,n) $\pi^{\pm}$ reaction. Izv. AN Kaz. SSR. Ser. fiz. 2 no.1:82-85 '62. (MIRA 18:8)

1. Fizicheskiy institut im. P.N.Lebedeva AN SSSR.

APPROVED FOR RELEASE: 08/25/2000 CIA-RDP86-00513R000411620010-6"

"APPROVED FOR RELEASE: 08/25/2000 CIA-RDP86-00513R000411620010-6

PRESNYAKOV, A.A., DUYSEMALIYEV, YU.K.

35

TRANSACTIONS OF THE INSTITUTE OF NUCLEAR PHYSICS (TRUDY INSTITUTA YADERNOY FIZ IKI) of the KAZAKH Academy of Sciences, Volume 2, by Different authors, Kazakh Academy of Science Publishing House ALMA-ATA, USSR, 1959.

The plasticity of some Cu-Ni and Ni alloys under dynamic loads.

APPROVED FOR RELEASE: 08/25/2000 CIA-RDP86-00513R000411620010-6"

"APPROVED FOR RELEASE: 08/25/2000 CIA-RDP86-00513R000411620010-6

2(0) PHASE I BOOK EXPLOITATION SOV/2838

Akademiya nauk Kazakhskoy SSR. Institut yadernoy fiziki

Trudy/Laboratoriya metallovedeniya i fiziki metallov/, tom 2 (Transactions of the Institute of Nuclear Physics, Kazakh S.S.R. Academy of Sciences /Laboratory for Metallurgical Science and Physics of Metals/, Vol 2) Alma-Ata, Izd-vo AN Kazakhskoy SSR, 1959. 169 p. 1,000 copies printed.

Ed.: F. Ya. Osadchiy; Tech. Ed.: P.F. Alferova; Editorial Board: I.O. Grinman, L.I. Dautova, I.G. Den'yanikov, D.K. Kaipov (Resp. Ed.), S.K. Kalinin, A.A. Presnyakov, and Zh. S. Takibayev.

PURPOSE: This is a collection of articles intended for research scientists, factory laboratory personnel, engineers, technicians, and also students and Aspirants in metallurgy and physics of metals.

COVERAGE: The collection contains research reports which investigate the dependency of alloy properties on their chemical and phase states in a wide range of temperatures down to melting point and set forth much factual material on aluminum, copper, nickel, and other alloys. Theoretical ideas on plasticity and superplasticity, which are described as new, and hypotheses on reasons for the lowered plasticity of solid solutions are propounded on the basis of experimental data. No personalities are mentioned. References are given at the end of each article.

APPROVED FOR RELEASE: 08/25/2000 CIA-RDP86-00513R000411620010-6"

"APPROVED FOR RELEASE: 08/25/2000 CIA-RDP86-00513R000411620010-6

S/020/60/131/04/027/073
B013/B007

AUTHORS: Savitskiy, Ye. M., Duysemaliyev, U. K.

TITLE: Superplasticity of LS59-1 Brass Which Is Alloyed With Cerium

PERIODICAL: Doklady Akademii nauk SSSR, 1960, Vol 131, Nr 4, pp 817-819 (USSR)

TEXT: The authors discovered the superplasticity of LS59-1 brass when testing the mechanical properties of cerium-alloyed brass at various temperatures. MO electrolytic copper, TsV zinc, and S-1 lead were used for fusion. Cerium was added in the form of a mixed crystal consisting of the following components (in wt%): La 21; Ce 51.4; Fe 0.84; Zn 0.003; Cl 0.006; S 0.005; P 0.0006. The specimens were produced in a high-frequency induction furnace of the type Ayaks. Table 1 lists the chemical composition of LS59-1 test melts. From the castings made in this manner specimens were turned out for breaking tests in the cast and the deformed, annealed state, after which they were subjected to tensile tests under static load. The test temperature was measured by means of a chromel-aluminum thermocouple. Three specimens were tested at each individual temperature. The relative elongation δ (in per cent) served as a measure of ...ticity since this property illustrates superplasticity more clearly than ... Microstructural analyses showed that these alloys have two phases. ...ing data concerning the elongation of the specimens. The

APPROVED FOR RELEASE: 08/25/2000 CIA-RDP86-00513R000411620010-6"

"APPROVED FOR RELEASE: 08/25/2000 CIA-RDP86-00513R000411620010-6

Superplasticity of LS59-1 Brass Which Is Alloyed With Cerium

S/020/60/131/04/027/073
B013/B007

elongation δ of LS59-1 brass containing various admixtures of mixed metals (in the cast and the deformed, annealed state) has a peak in the range of between 700° and 750°. The plasticity of diphase brass is improved in all cases by adding mixed metal admixtures without any change in its lead content. The temperature dependence of elongation found in a tensile test of the brass specimen is fundamentally changed by adding about 0.1 per cent of Ce. The zone of brittleness is smoothed, and the relative elongation δ at the temperature of maximum plasticity (750°) exceeds 150 per cent in the deformed, annealed state. The authors did not determine the optimum Ce content of LS59-1 brass, but they arrived at the following conclusions: An addition of about 0.1 per cent of Ce promotes the occurrence of superplasticity, but a Ce content of 0.5 per cent diminishes this effect. Nor did they determine the physico-chemical causes of superplasticity. However, it was found that the intensity of this effect depends considerably on the heating rate and the time for which the specimen is subject to a temperature of from 740-750°. In this temperature range LS59-1 brass undergoes the phase transformation $(\alpha + \beta) \rightleftarrows \beta$. Superplasticity is in some relation to the metastable state of cerium-alloyed LS59-1 brass. This is the reason why superplasticity is reduced by the action of heat that approaches the alloy toward the state of equilibrium. Mention is made of A. A. Bochvar,

Card 2/3

APPROVED FOR RELEASE: 08/25/2000 CIA-RDP86-00513R000411620010-6"

"APPROVED FOR RELEASE: 08/25/2000 CIA-RDP86-00513R000411620010-6

Superplasticity of LS59-1 Brass Which Is Alloyed With Cerium

S/020/60/131/04/027/073
B013/B007

Z. A. Sviderskaya, A. A. Presnyakov, V. V. Chervyakov, and G. V. Starikova. There are 3 figures, 1 table, and 3 Soviet references.

PRESENTED: Ocotber 19, 1959, by I. P. Bardin, Academician

SUBMITTED: October 13, 1959

Card 3/3

APPROVED FOR RELEASE: 08/25/2000 CIA-RDP86-00513R000411620010-6"